Analele Universităţii de Vest din Timişoara
Vol. LIV, 2010
Seria Fizică

DC POWER GENERATOR WITH MAGNETORHEOLOGICAL SUSPENSION

I. Bica[1], B. Vatzulik[1], G. Catana[1], O. E. Andrei[1], D. M. Baltateanu[1], L. Chirigiu[2]

[1]*Faculty of Physics, West University of Timisoara, Bd. V. Parvan, no. 4, 300223 Timisoara, Romania*
[2]*University of Medicine and Pharmacy Craiova, Bd.1Mai, 200638 Craiova, Romania*

Abstract
The paper presents a possible application of the magnetorheological suspension (MRS) to DC electrical machines. The MRS, obtained by thermal decomposition of $Fe_2(CO)_9$ in mineral oil, consists of iron particles (with diameters ranging between 0.6μm and 1.9μm) and technical saturation magnetization of 496kA/m – at H=1,050kA/m, is located between the stator and the rotor (of a d.c. current generator – type U9M4/U6T). The electric power supplied to a non-reactive load, as a function of number of rotations per unit time is measured. It is shown that the utilization of the MRS considerably enhances the output power of the generator.
Keywords: magnetorheological suspension, DC electrical machine.

1. Introduction

The MRS consists of magnetic particles additives and non-magnetic liquids [1-13, 29]. The particles that are utilized have diameters ranging between 0.1μm and 10μm. Within a few milliseconds [14, 15] from the application of the magnetic field, MRSs change into Bingham plastic [16, 17]. The modification of the fluidity of MRS with magnetic field strength is used in: seismic vibrations and shocks damping [16, 18-21], clutches [22], magnetoresistance [23-27], inductive position transducers [28] etc.

We think that a future application of MRS relates to the DC electric machines, and what follows comes to support this statement.

2. Experiment

2. 1. The modified generator

A DC generator of the type U9M4/U6T (KOLLMORGEN Corp.Glen. Cove. N.Y.) was used; in Fig.1 details are shown. An intermediate subassembly (5) has been placed between the stator and the rotor. The intermediate subassembly is provided with eight cylinder-shaped

cells (6) that will be filled with MRS during experiments. The working capacity of a cell is $224\times10^{-8}m^3$. A steel (OL37) screw (7) separates the MRS from the permanent magnets (2).

The positioning and the fixing of the intermediate subassembly are carried out in the guiding of the generator body (9) by means of the screws (3).

An overview of the experimental setup is given in Fig. 2.

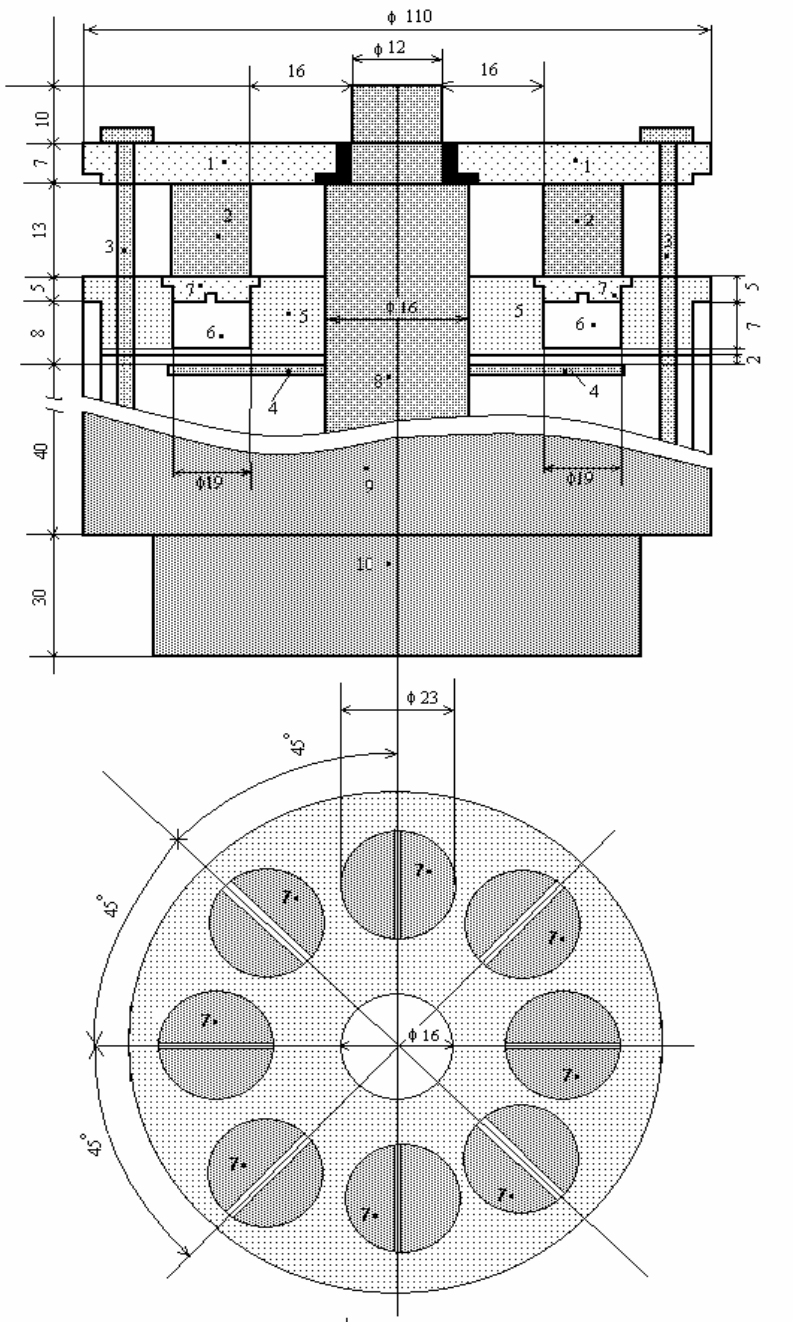

FIGURE 1. Modified generator, type U9M4/U6T: a) cross sectional view; b) intermediate subassembly (front view); 1, 7 - lid; 2 - permanent magnets; 3 - screw; 4 - rotor; 5 - plate (non-magnetic); 6 - cell, 8 -axe; 9 - generator body.

2. 2. The MRS

Both the installation, working principle and the MRS obtaining are discussed in Refs. [14, 17, 29].

The composition of the liquid matrix is given in Table 1.

TABLE 1. The liquid matrix composition

m_1(kg)	m_2(kg)	m_3(kg)
0.250	0.075	0.005

Here: m_1 is the mass of the $Fe_2(CO)_9$ powder (granulation: 4.5μm -5.2μm, minimum 97% Fe), m_2 is the mineral oil mass (ANERON, Merck type) and m_3 is the stearic acid mass.

By increasing nuclei iron particles result of shapes and sizes shown in Fig.2. The iron micro-particles are suspended in oil. The as-formed assembly is a MRS. The resulting MRS contains magnetic particles of mean diameter 1.137μm at a S.D. of 0.226μm. The magnetization curve is the one in Fig.2.

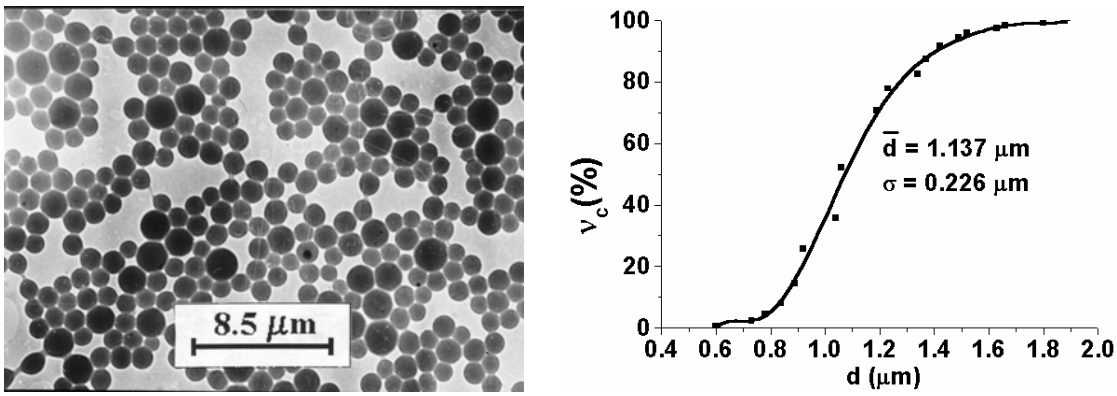

a b

FIGURE 2. Iron micro-particles obtained by thermal decomposition of $Fe_2(CO)_9$ in mineral oil: (a) shapes and sizes; (b) dimensional distribution of iron particles in mineral oil (d-diameter; $\bar{d}$ - mean diameter, σ -standard deviation).

3. Experimental results and discussion

The experimental setup for DC generator testing is shown in Fig. 3. It is designed for measuring the output power P of the generator G injected into the load R as a function of the number of rotations per second (n), of the DC electric motor M.

The output power P was measured using the V-A method, by means of the assembly shown in Fig. 3.

The power was measured as a function of "n" with and without MRS. These results are shown in Fig.4.

The diminution of the magnetic voltage in the gap between stator and rotor leads to the improvement of the technical characteristics of the DC machines [30, 31].

Indeed, the output power of the generator with MRS, is significantly higher (Fig.4b), as compared with the case when no MRS is used (Fig.4a).

If we denote by P_{MRS} the output power of the generator using MRS and by P_0 the corresponding quantity when no MRS is used, then we define the amplification factor of the output power, by means of the relation:

$$\eta = \frac{P_{MRS}}{P_0} \tag{1}$$

Based on the values of P_{MRS} and P_0 in Fig. 4, we obtain η as function of n; the results are shown in Fig. 6. Due to the increase of the magnetic field strength due to the currents through the rotor, the resulting magnetic field inside the MRS-filled gap changes [30].

As a consequence, the relative magnetic permeability of the MRS changes [32], causing thus a changes of the gap magnetic voltage [30].

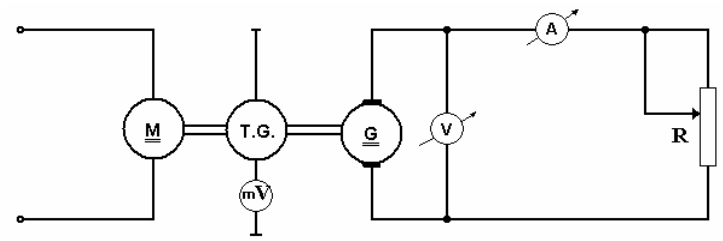

FIGURE 3. The general scheme of the experimental setup: M-electric motor (output voltage: $24V_{dc}$, output power: 45W, revolutions 40rev/s); TG-tachogenerator (1mV/rev/s); G-OC generator U9M4/U6T (modified); mV- mili-voltmeter; A - ampermeter; V - voltmeter, R - load (10Ω/40W), n - number of rotations per second).

The relation between the electromagnetic torque, M aiding on the rotor and the power P is [31]:

$$M = \frac{P}{\omega} \tag{2}$$

where: $\omega = 2\pi n$ is the angular velocity.

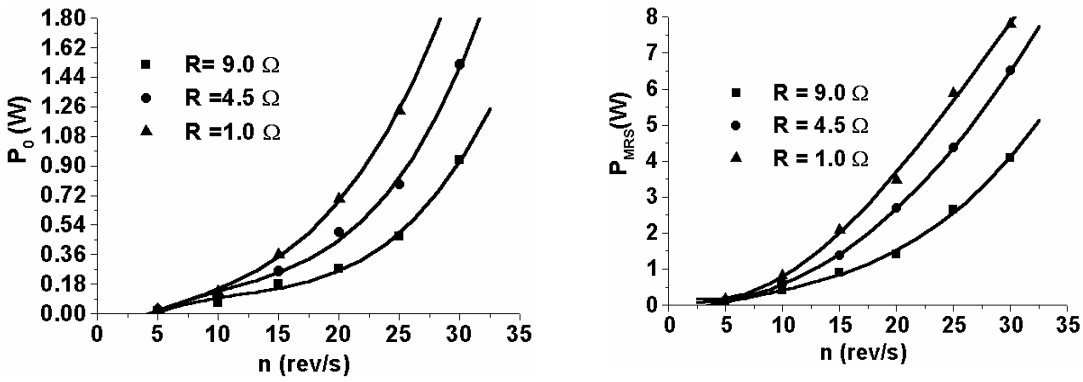

a b

FIGURE 4. The output power as a function of the number of rotations per unit time with load resistance as a parameter. R.: (a) generator without MRS; (b) DC generator with MRS.

Using the data plotted in Fig. 4, in Eq. (2) – we obtain M as a function of ω (Fig. 6). One can remark from Fig.6 that M increases considerably with ω, when MRS is utilized. It may be explained by the increase of the output power with increasing *n*, when the MRS is utilized.

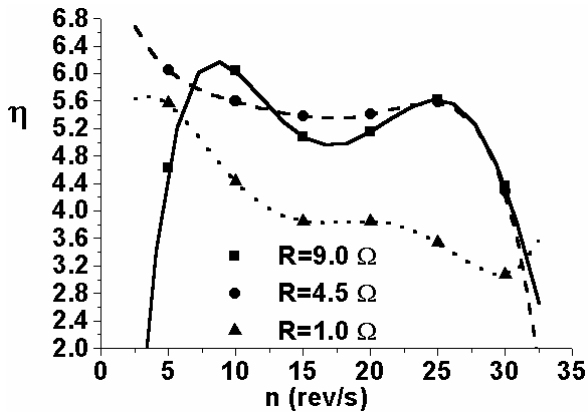

FIGURE 5. η vs. n for R as a parameter.

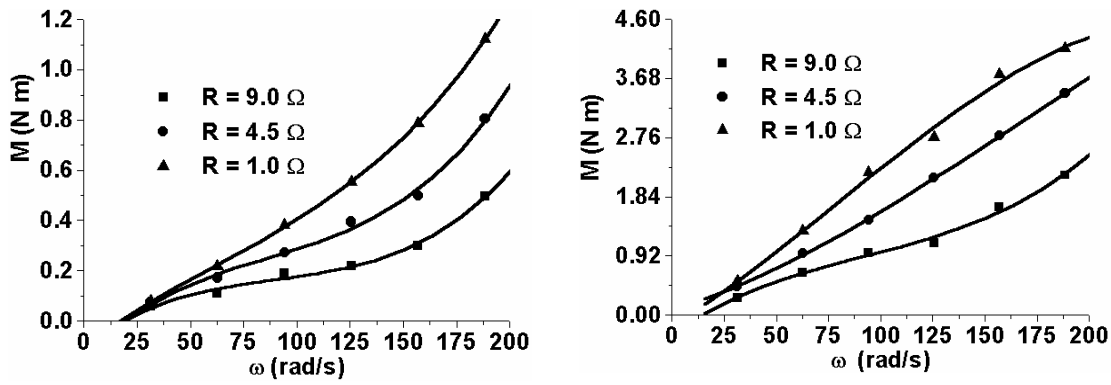

a b

FIGURE 6. M vs ω , for R as parameter: (a) DC generator without MRS; (b) DC generator with MRS.

Conclusions

A DC generator modified was used in the study of the effect of utilizing MRS on the output power delivered on resistive loads;

The decrease of the gap magnetic voltage by using MRS increases the output power dissipated on ohmic loads;

Due to the change on the resulting gap magnetic field, the relative magnetic permeability of MRS changes. As a consequence, the gap magnetic voltage changes leading to the modification of the amplification factor η of the output power.

Acknowledgement

The authors thank to Erhardt Papp and Aurel Ercuța (West University of Timisoara) for critical reading of the manuscript, and useful suggestions.

References

1. J. H. Park, B. D. Chin, and O. Ok. Park, J. Colloid. Interf. Sci., 240 (2001) 349
2. H. J. Choi, M. S. Cho, and K. To, Physica A 254 (1998) 272
3. Ji W. Kim, S. G. Kim, H. J. Choi, and M. S. Jhon, Macromol. Rapid Commun. 20 (1999) 450.
4. In S. Sim, Ji W. Kim, and H. J. Choi, Chem. Mater. 13 (2001) 1243
5. M. S. Cho, Y. H. Cho, H. J. Choi, and M. S. Jhon, Langmuir 19 (2003) 5875
6. M. S. Cho, H. J. Choi, and W.-S. Ahn, Langmuir 20 (2004) 202
7. M. S. Cho, H. J. Choi, and M. S. Jhon, Polymer 46 (2005) 11484
8. M. S. Cho, and H. J. Choi, Mater. Sci Forum, 449-452 (2004) 1201
9. S. T. Lim, M. S. Cho, In B. Jang, H. J. Choi, and M. S. Jhon, IEEE Trans. on Magnetics, 40, 4 (2004) 3033
10. S. T. Lim, M. S. Cho, In B. Jang, H. J. Choi, J. M. Magn. Mater., 282 (2004) 170
11. S. T. Lim, H. J. Choi, M. S. Jhon, IEEE Trans. on Magnetics 41, 10, (2005) 3745
12. J. D. Carlson, M. R. Jolly, Mechatronics 10 (2000), 555
13. G. Bossis, S. Lacis, A. Meunier, O. Volkova, J. Magn. Magn. Mater, 252 (2002) 224.
14. K. Shimada,Y. Akagami, Kamiyama, T. Fujita, T. Miyazaki, Shibayama, Proc. of the 8th Int. Conf. ERF and MRS, Ed. G. Bossis, Nice, France, World Scientific, Hong Kong, 9-15, (2002)
15. S. Sudo, M. Funaoka, Nishiyama, Proc. of the 8th Int. Conf. ERF and MRS, Ed. G. Bossis, Nice, France, World Scientific, Hong Kong 16-22, (2002)

16. A. Milecki, Int. J. Machine Tools & Manufacture 41 (2001) 379
17. S. Genç, P. P. Phulé, Smart Mater. Struct. 11 (2002) 140
18. Y. Q. Ne,Y. Chen, J. M. Ko, D. Q. Cao, Engineering Structure 24 (2002) 295
19. H. Gavin, J. Hoagg, M. Dobossy, Proc. US-Japan Workshop on Smart Structures for Improved Seismic Performance in Urban Regions, 14 August 2001, Seattle WA, Ed. K. Kawashima, B. F. Spencer and Y. Suzuki, pp. 225
20. Sh. P. Kelso, Proc. of SPIE Conf. on Smart Structures and Materials, Paper no. 4332-34, Newport Beach, CA, March, 2001
21. I. Bica, J. Magn. Magn. Mater., 241 (2002) 196
22. I. Bica, J. Magn. Magn. Mater., 270, 3 (2004) 321
23. St. Bednarek, J. Magn. Magn. Mater., 202 (1999) 574
24. I. Bica, J. Magn. Magn. Mater., 299 (2006) 412
25. I. Bica, Phys. B. 371, 1 (2006) 145
26. I. Bica, J. Ind. Eng. Chem. 12, 4 (2006) 501
27. Lord Corporation, http://www.rheonetic.com
28. I. Bica, Mat. Sci. Eng. B98, (2003) 89
29. A. Nethe, Th. Scholz, H. Stahlmann, Magnetohydrodynamics, 37, 3, (2001) 312
30. N. Bichir, C. Răduți, A. S. Diculescu, Electric Motors (in Romanian), Didactical and Pedagogical Press, Bucharest, pp.335-357 (1979)
31. C. Lemaire, G. Bossis, D. Volkova, Int. J. Mod. Phys, B10, 23-24, (1996) 3173
32. H. Nishiyama, T. Oyama, T. Fujita, In P:roceed. of the 7th Int. Conf. ERF and MRS, Honolulu, Hawaii, Ed. R.Tao, World Scientific, Hong-Kong, pp. 306- 313 (2000).